MSVF3X3313IR2-BCDN-MD

Type		AI VARI	Mount		φ 14 Straight Mount
Focal Length		3.3～10.0mm	Back Focus		5.476～11.97mm
Fno.		F1.3	Flange Back		13.8mm
Designed Image Format		1/2.7″(φ 6.71)	Exit Pupil		-82.738 ～ -21.694mm
Operation Range	Iris	F1.3-F360	Filter Size		-
	Focus	0.5m～∞	Aperture	Front	φ 19.5mm
	Zoom	3.3～10.0mm		Rear	φ 7.0mm
Control	Iris	DC Galvanometer			
	Focus	Mortorized	Dimension		φ 29.2 x 37.9mm
	Zoom	Mortorized	Weight		27g
	ICR	DC Galvanometer			
Object Size at MOD	Wide	701.1x1132.2mm	545.4x1446mm		
	Tele	215.8x291.2mm	177.7x325mm		
Field of View	D	4:3 Screen 130.5° ～39.7°	16:9 Screen 134.8° ～40.4°		
	H	95.7° ～31.8°	109.2° ～35.2°		
	V	68.8° ～23.8°	56.1° ～ 19.7°		

Control	Iris	Focus	Zoom	IR cut filter
Motor type	Galvanometer	PM type stepping motor	PM type stepping motor	Galvanometer
Operation voltage	3.0V ～ 5.0V	2.8V ～ 3.6V	2.8V ～ 3.6V	3.0V ～ 5.0V
Driving Coil resistance	190Ω /phase ±10%	28.5Ω /phase ±7%		190Ω /phase ±10%
Damping Coil resistance	855Ω /phase ±10%	-	-	-
Excite driving method	-	1-2phase Bipolar Constant voltage	1-2phase Bipolar Constant voltage	-
Reduction ratio	-	1/131.574	1/131.574	-
Step angle	-	0.171°	0.171°	-
Insulation resistance	1MΩ or more	1MΩ or more	1MΩ or more	1MΩ or more
Light Measuring Method	-			
Input Signal	-			
Iris Accuracy	-			
Sensitivity Adjustment	-			
Operating Temperature	-10 ～+50 ℃			

DIMENSIONS

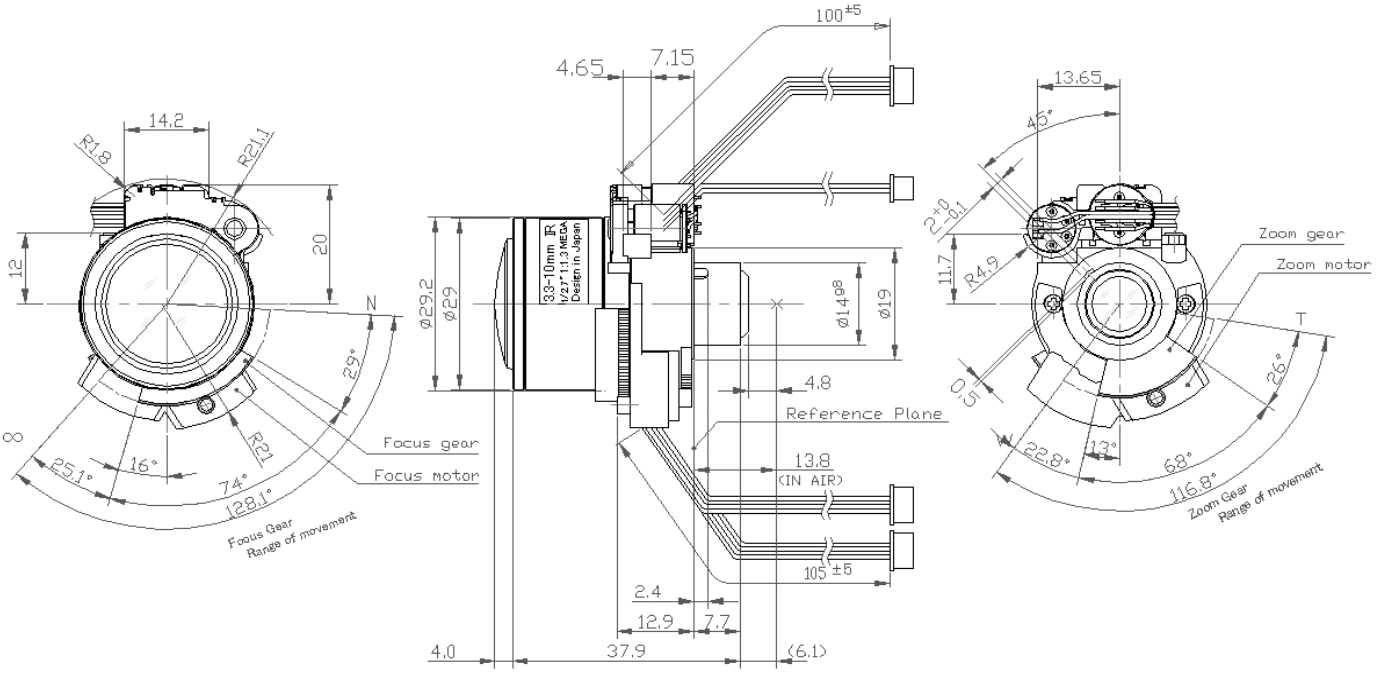

Subject to change without notice

MSVF3X3313IR2-BCDN-MD

CONNECTION & CONTOROL

(1) Auto Iris terminal

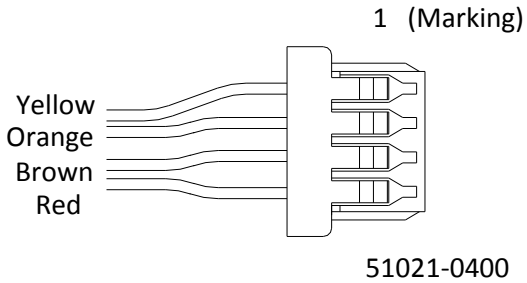

Pin number	Color	Assignment
1	Yellow	Damping(+)
2	Orange	Damping(−)
3	Brown	Driving (+)
4	Red	Driving (−)

(2) IR Cut Filter Control terminal

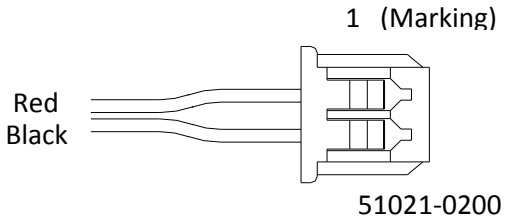

Pin number	Color	Assignment
1	Red	IR IN/OUT(−/+)
2	Black	IR GND

(3) Zoom Moter Control terminal

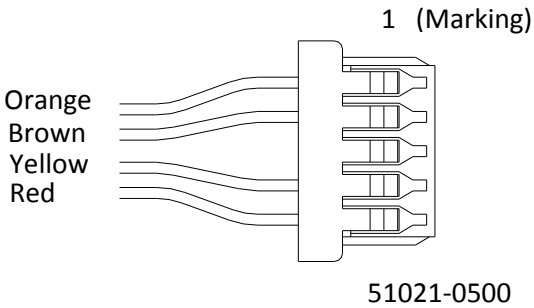

Pin number	Color	Assignment
1	Orange	B
2	Brown	A
3	N/A	N/A
4	Yellow	$\overline{B}$
5	Red	$\overline{A}$

(4) Focus Moter Control terminal

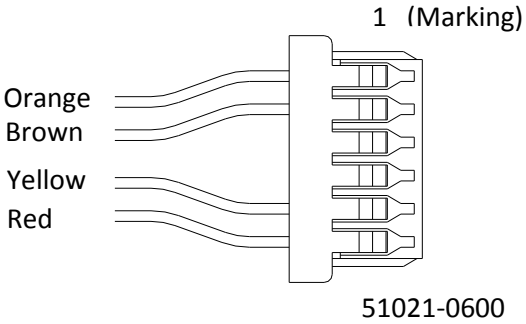

Pin number	Color	Assignment
1	Orange	B
2	Brown	A
3	N/A	N/A
4	N/A	N/A
5	Yellow	$\overline{B}$
6	Red	$\overline{A}$

(5)Moter Control Excitation pattern

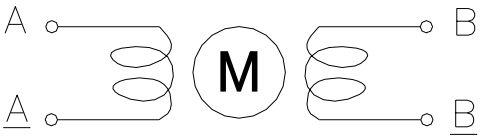

Motor connection

Focus & Zoom

Excite Pottem of CW revolution				
Step	A	$\overline{A}$	B	$\overline{B}$
0	H	L	H	L
1	L	L	H	L
2	L	H	H	L
3	L	H	L	L
4	L	H	L	H
5	L	L	L	H
6	H	L	L	H
7	H	L	L	L