MSVF3.3X0313IR-BCPN

Type		AI VARI	Mount	φ 14 Straight Mount
Focal Length		3.0～10.0mm	Back Focus	4.81～11.88mm
Fno.		F1.3	Flange Back	13.8mm
Designed Image Format		1/2.7″(φ 6.75)	Exit Pupil	-90.3 ～ -10.8mm
Operation Range	Iris	F1.3-F16-Closed	Filter Size	-
	Focus	0.5m～∞	Aperture Front	φ 18.8mm
	Zoom	3.0～10.0mm	Aperture Rear	φ 7.8mm
Control	Iris	Mortorized		
	Focus	Manual Control	Dimension	φ 31.6 x 38.9mm
	Zoom	Manual Control	Weight	28g
	ICR	DC Galvanometer		
Object Size at MOD	Wide	779x1288mm		
	Tele	219x296mm		
Field of View	D	4:3 Screen 136° ～40°	16:9 Screen 139° ～41°	
	H	4:3 Screen 104° ～32°	16:9 Screen 117° ～36°	
	V	4:3 Screen 75° ～24°	16:9 Screen 61° - 20°	

Control	Iris	IR cut filter	-	-
Motor type	PM type stepping motor	Galvanometer	-	-
Operation voltage	2.6V ～ 3.8V	3.5V ～ 5.0V	-	-
Coil resistance	28.5Ω /phase ±10%	240Ω /phase ±10%	-	-
Excite driving method	2phase Bipolar Constant voltage	-	-	-
Reduction ratio	-	-	-	-
Step angle	0.709°	-	-	-
Insulation resistance	1MΩ or more	1MΩ or more	-	-
Light Measuring Method	-			
Input Signal	-			
Iris Accuracy	-			
Sensitivity Adjustment	-			
Operating Temperature	-10 ～+50 ℃			

DIMENSIONS

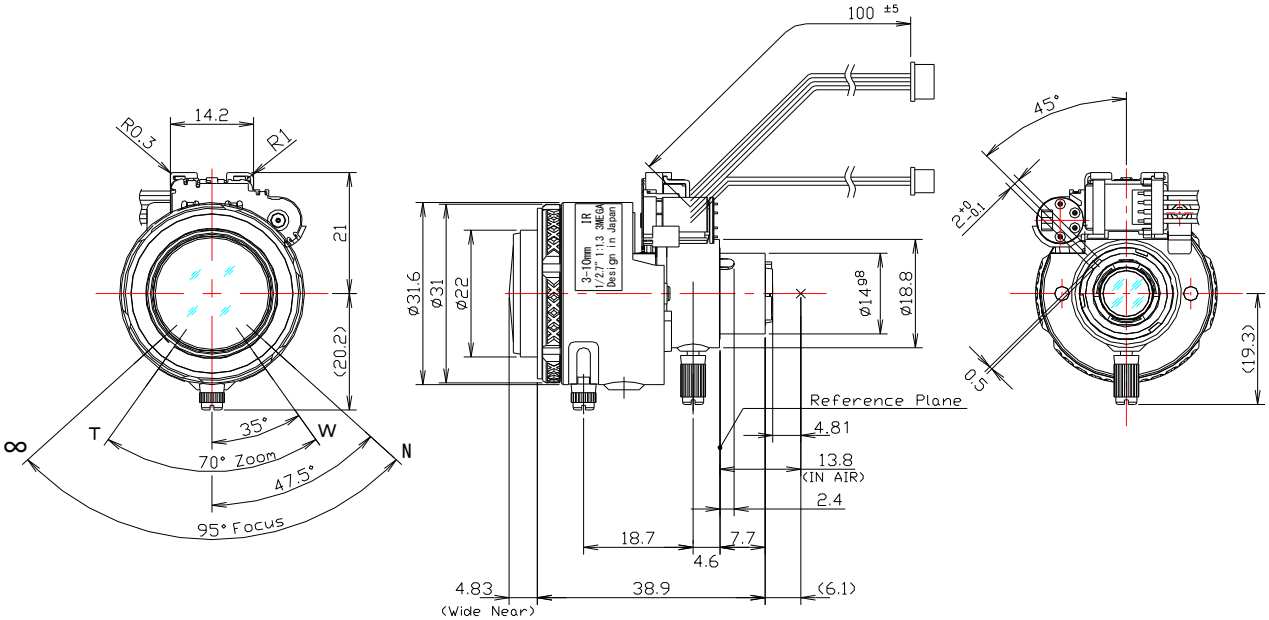

Subject to change without notice

MSVF3.3X0313IR-BCPN

(1) Auto Iris terminal

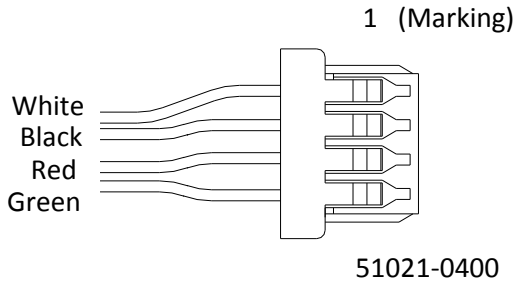

Pin number	Color	Assignment
1	White	$\overline{A}$
2	Black	B
3	Red	A
4	Green	$\overline{B}$

(2)Moter Control Excitation pattern

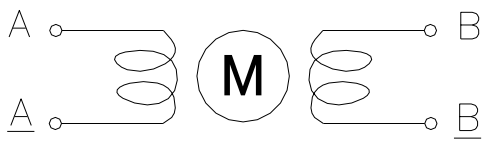

Motor connection

Iris CW: Open → Close

Excite Pottem of CW revolution				
Step	A	$\overline{A}$	B	$\overline{B}$
0	H	L	H	L
1	L	H	H	L
2	L	H	L	H
3	H	L	L	H

(3) IR Cut Filter Control terminal

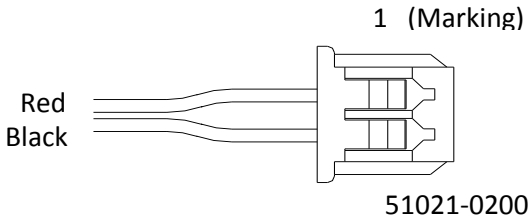

Pin number	Color	Assignment
1	Red	IR IN/OUT(−/+)
2	Black	IR GND